3/4" Temperature Control Valve with Shut-off Control Valve 4PRBHXC

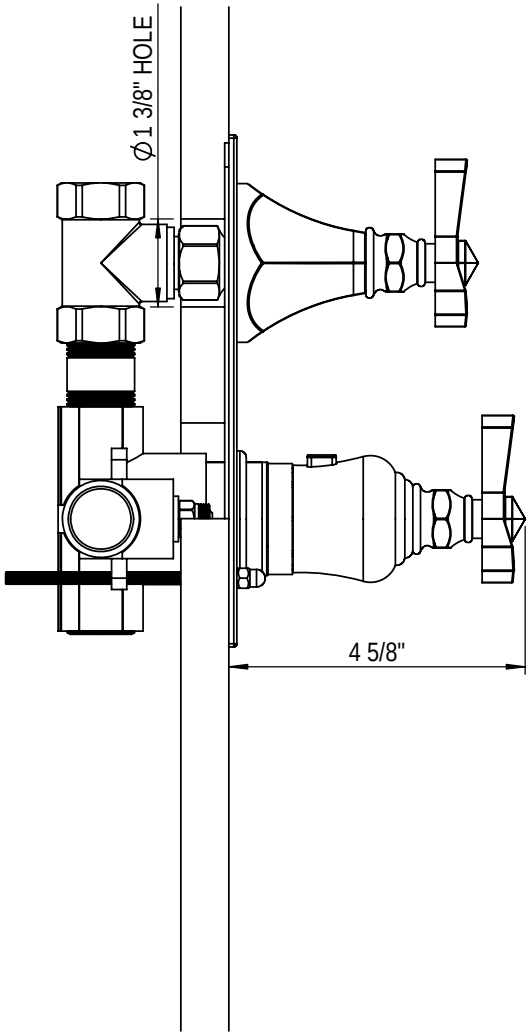

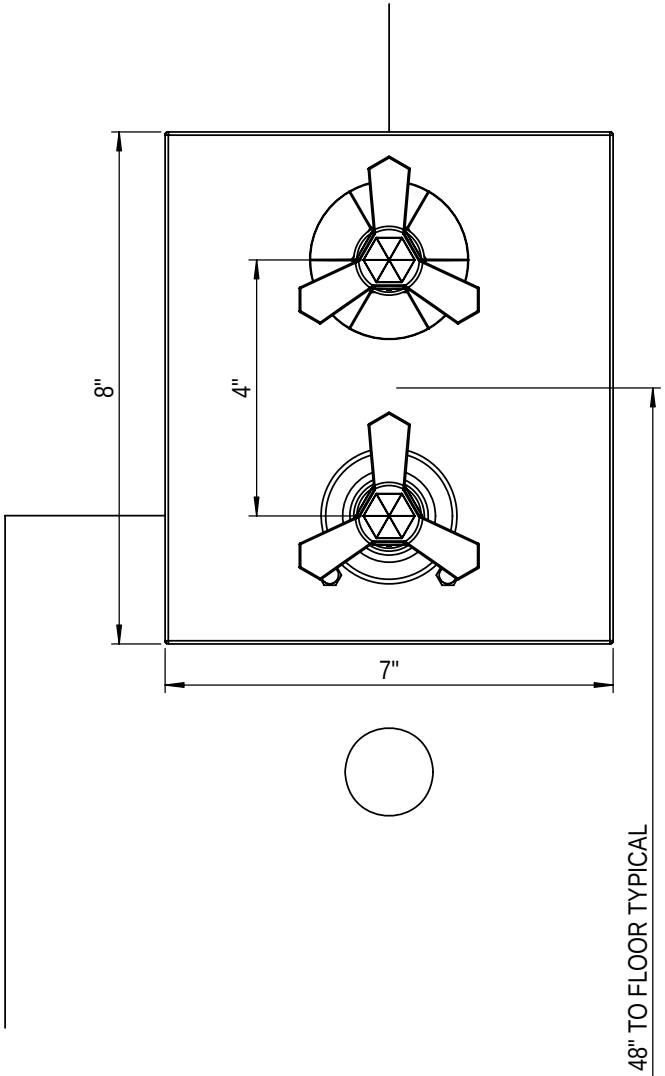

TEL: 905-851-6781
FAX: 905-851-8031
TOLL FREE: 800-461-5901

the RUBINET FAUCET COMPANY

www.rubinet.com

1/2" Temperature Control Valve with Shut-off Control Valve 4QRBHXC

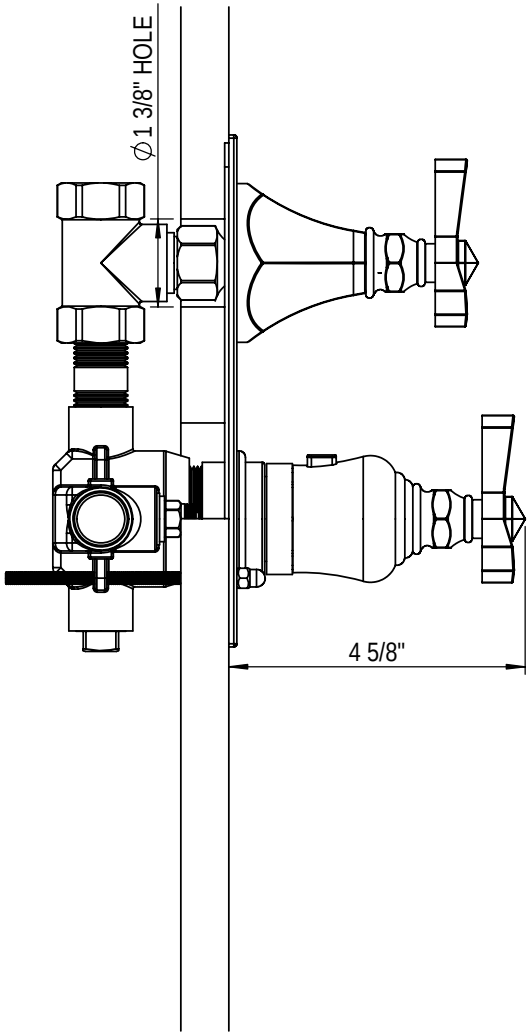

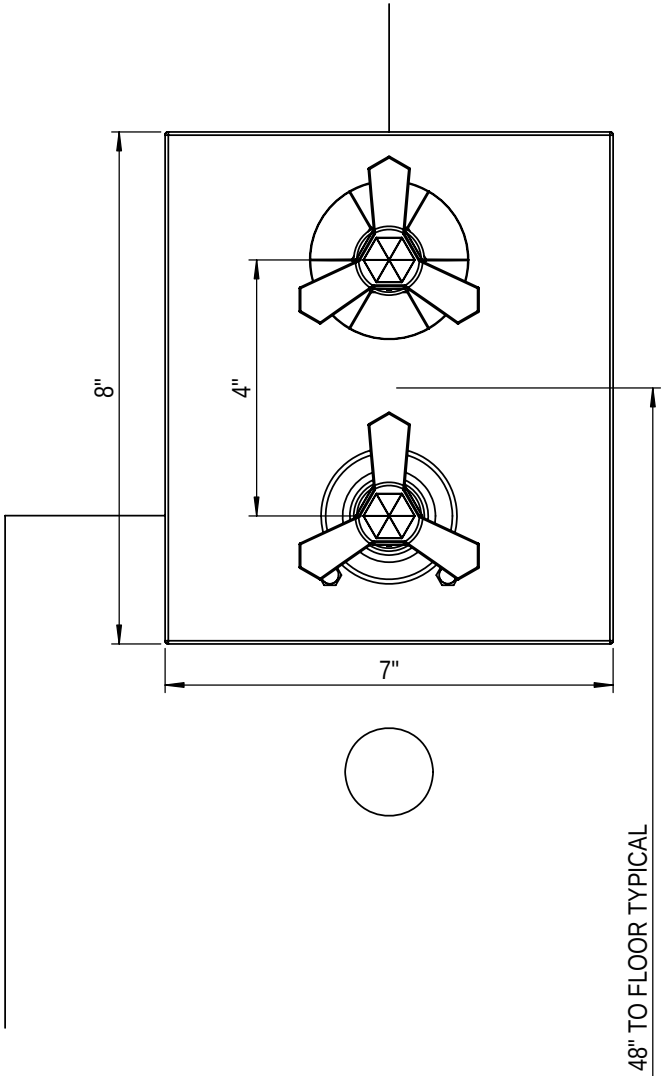

TEL: 905-851-6781
FAX: 905-851-8031
TOLL FREE: 800-461-5901

the RUBINET FAUCET COMPANY

www.rubinet.com