Antiquity 12" Shower Head less Jets, 20" Shower Arm & Flange 4FRB007

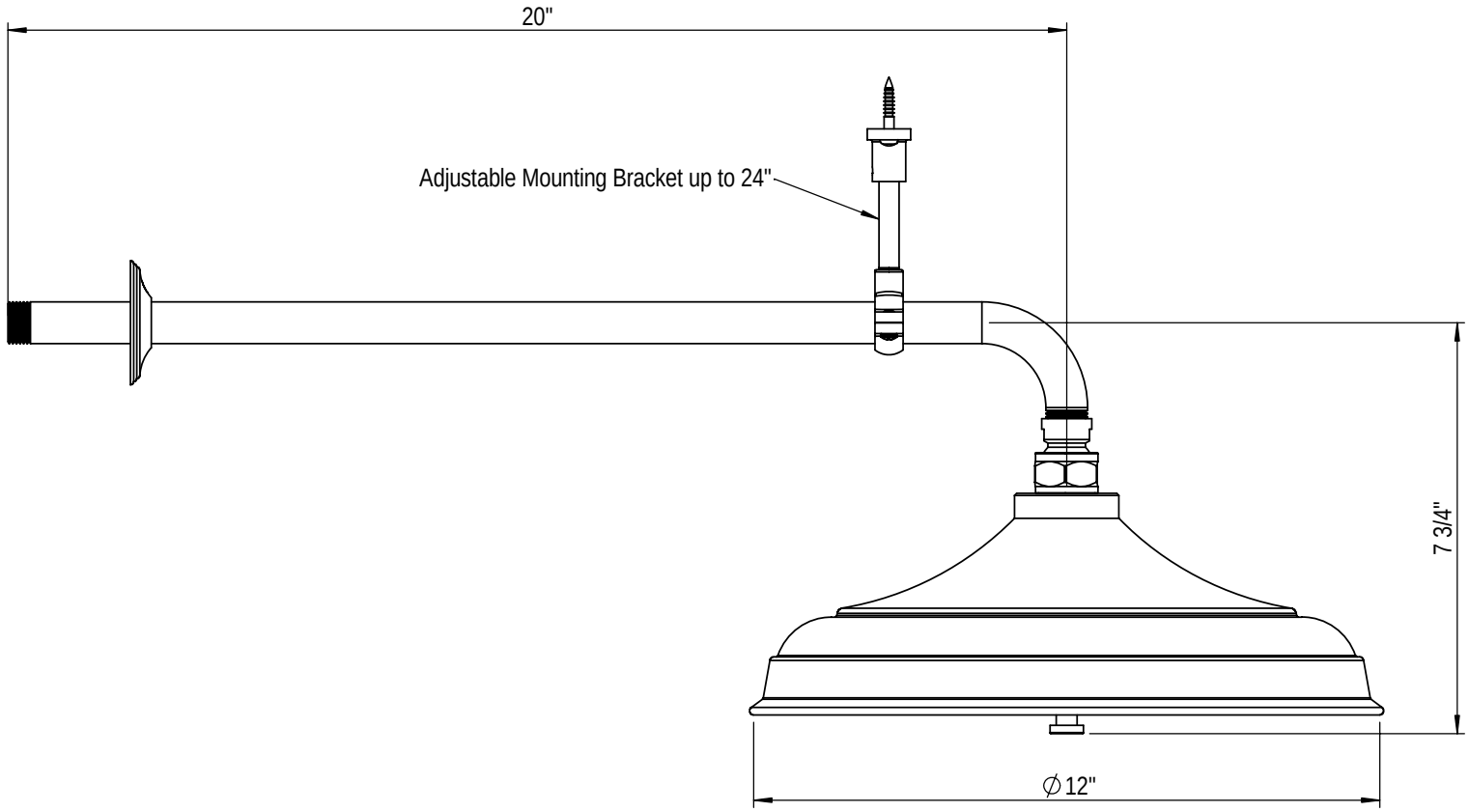

TEL: 905-851-6781
FAX: 905-851-8031
TOLL FREE: 800-461-5901

the RUBINET FAUCET COMPANY

www.rubinet.com